back side diaphragm seal for high pressure, with threaded connection

MGS9/1A

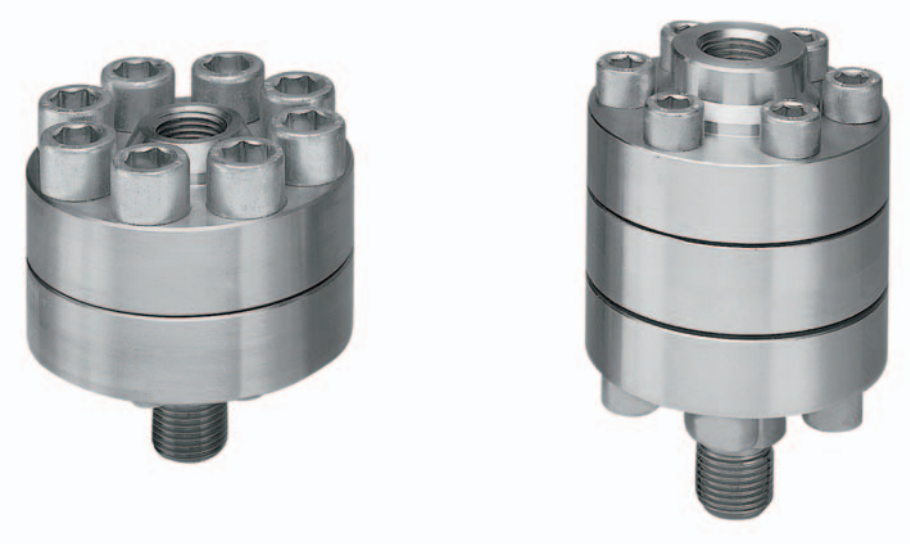

Diaphragm seals are designed to isolate the sensing element of pressure gauges, pressure switches and electronic pressure transmitter from process fluids which may be corrosive, viscous, sedimentous and/or with a high temperature. The diaphragm is mechanically clamped between the upper housing and intermediate ring and is leak proof tested to guarantee fill fluid separation from process fluid. Model MGS9/1A0 is cleaned by removing the lower housing from the intermediate ring. Both models are without sealing gaskets. This construction feature and its compact design suits many application that require frequent maintenance, for model MGS9/1A0.

4.1AS - MGS9/1AS

Working pressure: *from 0...6000 to 0...8000 psi;* (from 0...400 bar to 0...600 bar).
Working temperature: *-49...+302 °F* (-45°C...+150°C).
Accuracy*: (add to instrument accuracy) ±0,5% for direct mounting; ±1% for capillary mounting.
Instrument connection: AISI 316 st. st.
Diaphragm: metallic seal,
4 - AISI 316L st.st.,
9 - Hastelloy C276,
6 - Monel 400.
Process connection:
4 - AISI 316 st.st.,
5 - AISI 316 L st.st.
Clamp bolts: high tensile carbon steel.
Filling liquid: silicon oil.

4.1A0 - MGS9/1A0

Working pressure: *from 0...1000 to 0...6000 psi;* (from 0...60 bar to 0...400 bar).
Working temperature: *-49...+302 °F* (-45°C...+150°C).
Accuracy*: (add to instrument accuracy) ±0,5% for direct mounting; ±1% for capillary mounting.
Instrument connection: AISI 316 st. st.
Diaphragm: metallic seal,
4 - AISI 316L st.st.,
9 - Hastelloy C276,
6 - Monel 400.
Intermediate ring: AISI 316 st.st.
Process connection:
4 - AISI 316 st.st.,
5 - AISI 316 L st.st.
Clamp bolts: high tensile carbon steel.
Filling liquid: silicon oil.

* at *68°F* (20 °C) process temperature (or state temperature when ordering)

back side diaphragm seal
for high pressure, with threaded connection

MGS9/1A

MGS9/1AS

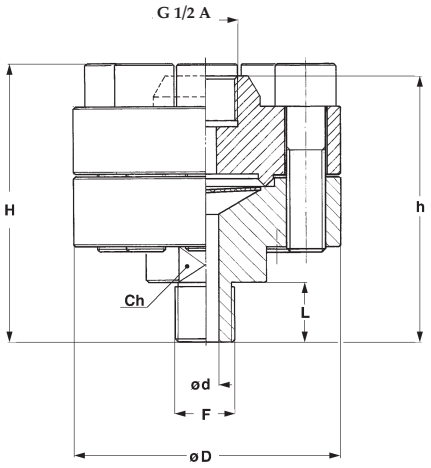

MGS9/1A0

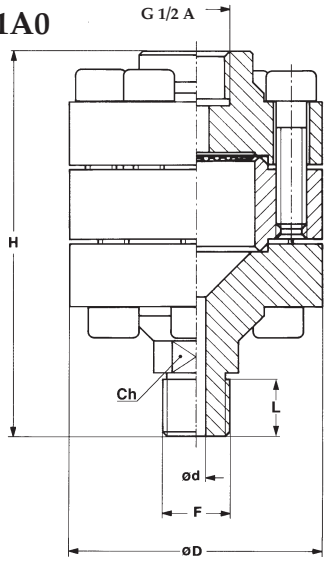

F	d	H	h	L	D	Ch
41M - G 1/2 B	*0.27″*	*3.66″*	*3.50″*	*0.78″*	*3.50″*	*1.41″*
43M - 1/2 NPT	(7)	(93)	(89)	(20)	(89)	(36)

F	d	H	L	D	Ch
41M - G 1/2 B	*0.23″*	*4.78″*	*0.78″*	*3.14″*	*0.86″*
43M - 1/2 NPT	(6)	(121,5)	(20)	(80)	(22)

dimensions : *inches* (mm)

ASSEMBLING

All diaphragm seals are mounted on the instruments ad fixed by an aluminium protection label. For applications with capillary: shoul diaphragm seal and instrument not be at the same level, instrument adjustment is required. (For use and installation, see data sheet "MGS9")

D -	Direct
T -	Cooling extension
1 -	Capillary AISI304 st.st., *236″ max* (6 mt max)
9 -	Capillary AISI304 st.st., covered with AISI304 st.st. armour, *236″ max* (6 mt max)
6 -	Capillary AISI316 st.st., covered with AISI316 st.st. armour, *236″ max* (6 mt max)

OPTIONS

Model	
B -	Silicon liquid "B"for process fluid temperature *from -4°F to +482°F* (from -20°C to +250°C)
C -	Silicon liquid "C" for process fluid temperature *from +68°F to +644°F* (from +20°C to +340°C)
E -	Fluorinated liquid "E" for process fluid temperature *from -76°F to +302°F* (from -60°C +150°C)
R20 -	Adaptor G 1/2 A M/F
R22 -	Adaptor G 1/2 A M x 1/2 - 14 NPT F
R21 -	Adaptor G 1/2 A M x 1/4 - 18 NPT F
T11 -	Washing plug
C05 -	Helium Test
E30 -	Nace version MR0103 (1) - MR0175 (ISO 15156) (2)

(1) Stainless steel process connection and Monel 400 or Hastelloy C276 diaphragm. (2) Wetted parts hastelloy C276

"HOW TO ORDER" SEQUENCE

Section	Model	Connection material	Diaphragm material	Process Connection	Instrument connection	Assembling	Options
4	**1AS**	**4**	**4, 9, 6**	**41M**	**41F - G 1/2 F**	**D, T**	**B...E30**
	1A0	**5**		**43M**		**1, 9, 6**	

RB1 - 06/08
IN ORDER TO IMPROVE THEIR PRODUCTION, MESSRS. NUOVA FIMA RESERVE THE RIGHT TO THEMSELVES TO MAKE ALL THE MODIFICATIONS THAT THEY DEEM INDISPENSABLE AT ANY TIME. UPDATED DATA-SHEET ARE AVAILABLE ON SITE: www.nuovafima.com

NUOVA FIMA S.p.A. - www.nuovafima.com
P.O. BOX 58 - VIA C. BATTISTI 59 - 28045 INVORIO (NO) ITALY
TEL. +39 0322 253200 - FAX +39 0322 253232